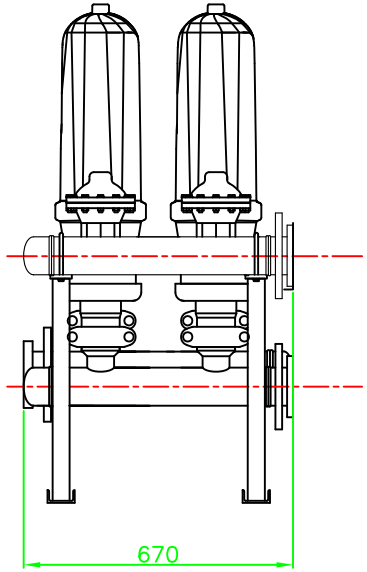

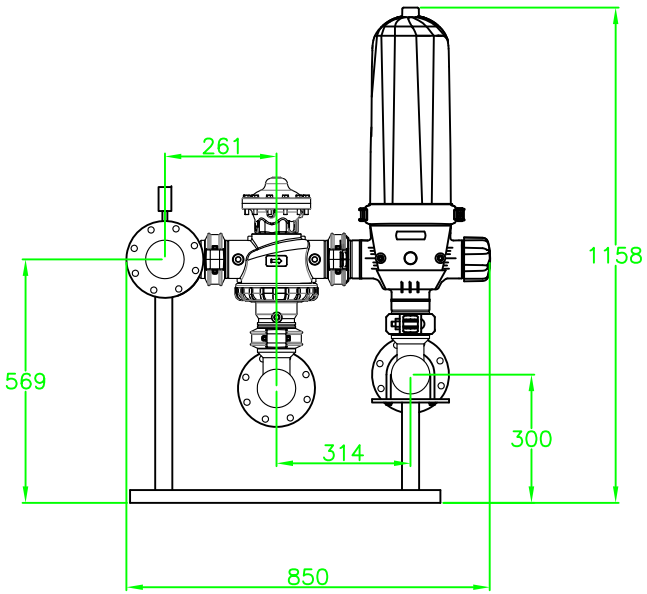

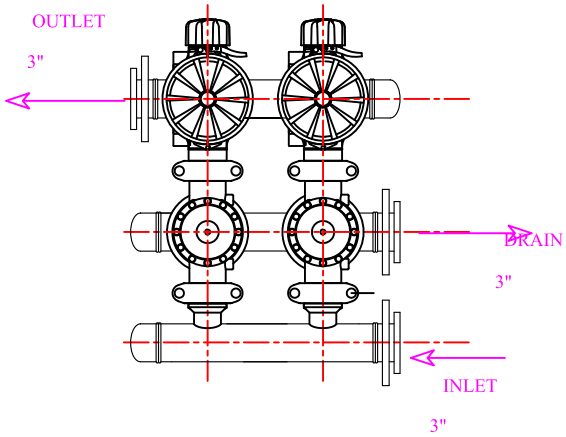

NOTES:
1. PIPING MATERIAL: PE
2. CONNECTION TYPE: ANSI 150# FLANGE.
3. MANUAL VALVES SHALL BE INSTALLED AT THE INLET AND OUTLET OF THE DISC FILTER.
4. THE DRAIN PIPE SHALL BE CONNECTED TO THE DRAINAGE SYSTEM.
5. POWER SUPPLY: 220V/1PHASE/50HZ.
6. CONCRETE FOUNDATION (HEIGHT: 200MM)
7.AND EXPANSION ANCHOR BOLTS ARE SUGGESTED FOR SITE INSTALLATION.

标记	处数	分区	更改文件号	签名	DATE
R	内部评审版				
A	初步设计				

REV	DESCRIPTION	DESD	DATE	APPD	DATE	APPD	DATE

Beijing Haiao Technologies Co.,ltd

HF-A3-2-3 DISCFILTER	MATERIAL	QUANTITY	WEIGHT	SCALE
DWG NO HF-A03-2-00-01	/	1		1:1
	SHEET	OF		